SP2798X

Main Line Power Up Non-Isolated Buck APFC LED Driver

Features

- ·Active PFC for High power factor and low THD
- ·Built-in HV start-up and IC power supply circuit, The VDD power supply resistors and power feedback circuits from LED chips are not needed
- ·600V high voltage MOSFET integrated
- ·±3% LED output current accuracy
- ·Excellent line and load regulation
- Quasi-Resonant (QR) Buck topology
- ·System efficiency up to 95%
- ·Ultra low start up & operating current
- ·Cycle-by-cycle current limit
- ·LED short protection
- ·LED open protection
- ·Over-temperature protection

General Description

The SP2788Xare built-in HV start-up and IC power supply circuit, main line power up constant current LED regulators with high current accuracy which applies to single stage step-down power factor corrected LED drivers. 600V power MOSFET is integrated, which can significantly simplify the design of LED lighting system.

High accuracy of output current is achieved by sampling the output current directly. Quasi Resonant (QR) Buck topology reduces the switching losses and largely increases theefficiency.

The SP2788Xare supplied from the main line, the VDD power supply resistors and power feedback circuits from LED chips are not needed, save cost and help for assemble efficiency.

The SP2788X have multi-protection functions which largely enhance the safety and reliability of the system, including VDD over-voltage protection, VDD UVLO, short-circuit protection, LED open protection, cycle-by-cycle current limit and over-temperature protection.

The SP2788Xare available in SOP-7package.

Typical Application

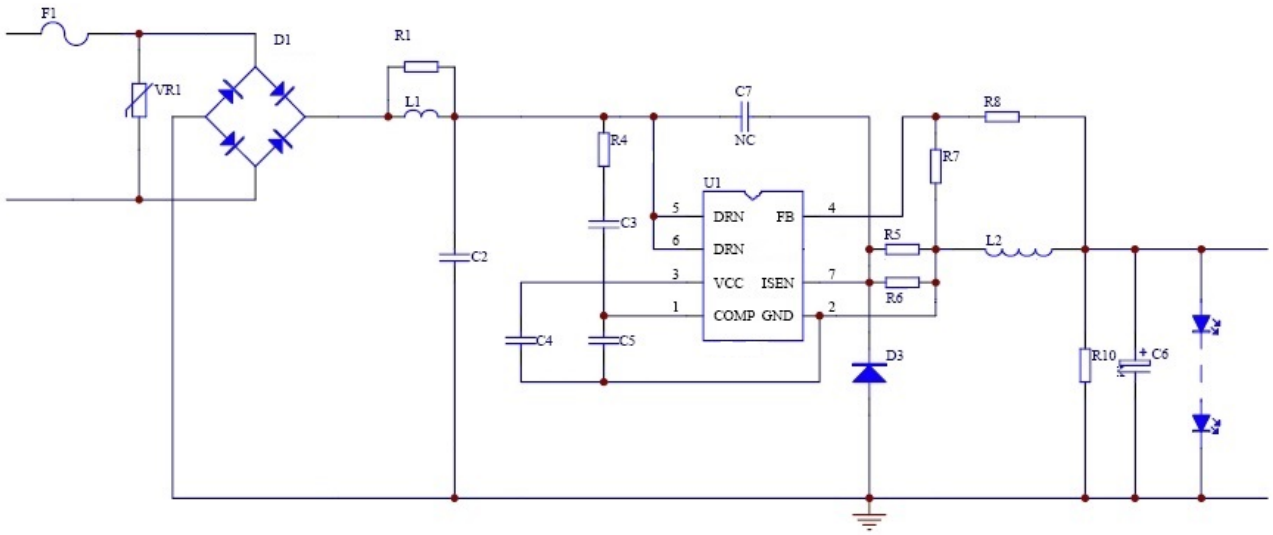

microelectronics

Marking

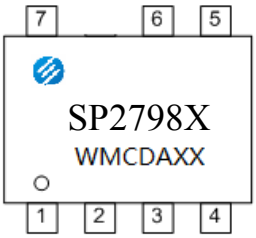

SOP-7

Recommended Operation Conditions

Products	Symbol	Range	Unit
SP2798A	$I_{LED}1$	<150 @V_{OUT}=80V	mA
	$I_{LED}2$	<180 @V_{OUT}=36V	
SP2798B	$I_{LED}1$	<180 @V_{OUT}=80V	mA
	$I_{LED}2$	<240 @V_{OUT}=36V	
SP2798C	$I_{LED}1$	<300 @V_{OUT}=80V	mA
	$I_{LED}2$	<420 @V_{OUT}=36V	

Pin Description

Pin	Pin Name	Description
1	COMP	Compensation Pin for Internal Error Amplifier. Connect a capacitor between the pin and GND to compensate the internal feedback loop.
2	GND	Ground.
3	VDD	Power Supply Pin. This pin supplies current to the internal start-up circuit. This pin must be bypassed with a capacitor nearby.
4	FB	Voltage Loop Feedback Pin. FB is used to detect LED open by sampling the output voltage.
5/6	DRAIN	DRAIN of the MOSFET.
7	ISEN	Output Current Sense Pin. The pin is used for output current control.

Sample Microelectronics

Ordering Information

Part Number	Description	Marking
SP2788A	SOP-7，ROHS、Tape，4000Pcs/Roll	SP2788A
SP2788B	SOP-7，ROHS、Tape，4000Pcs/Roll	SP2788B
SP2788C	SOP-7，ROHS、Tape，4000Pcs/Roll	SP2788C

Functional Block Diagram

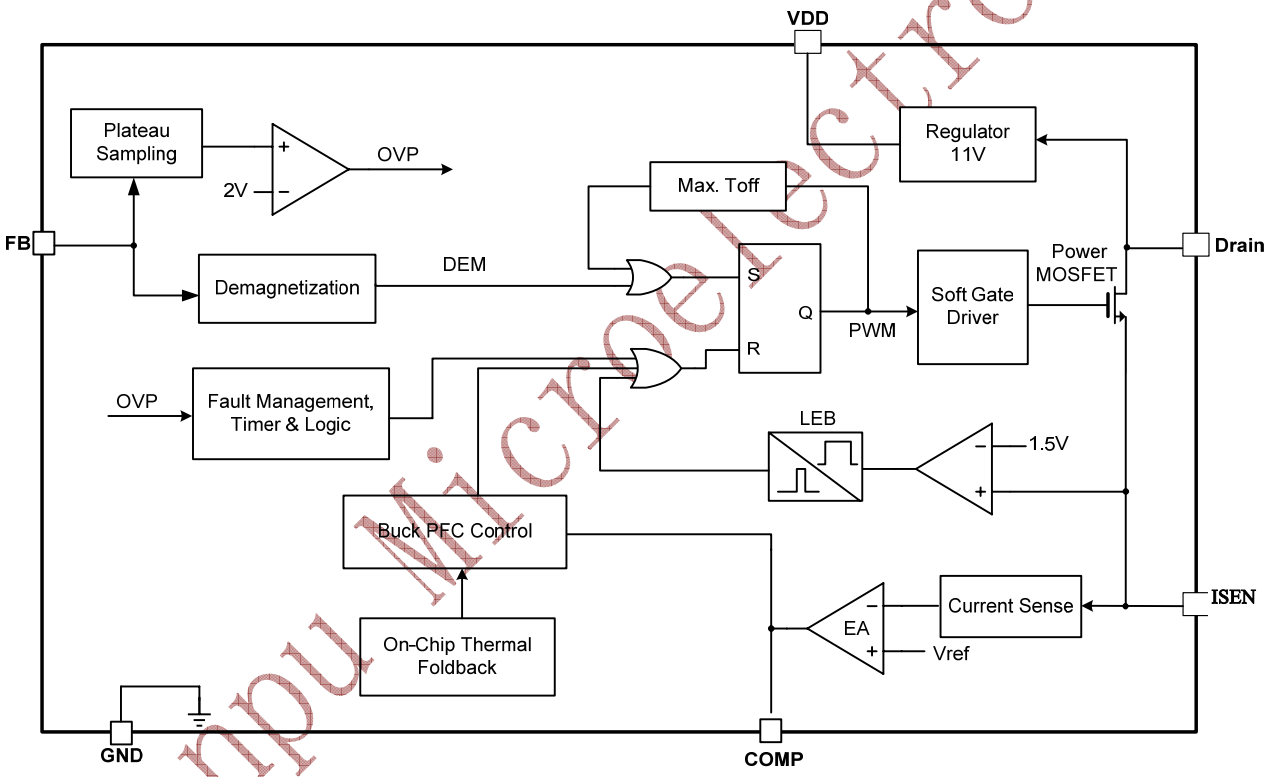

Sanpu Microelectronics

Absolute Maximum Ratings

Parameter	Symbol	Parameter Range	Unit
Voltage On DRAIN Pin	VDRN	-0.3～600	V
Voltage On ISEN Pin	VISEN	-0.3～7	V
Voltage On COMP Pin	Vcomp	-0.3～7	V
Voltage On FB Pin	VFB	-0.3～7	V
Maximum Operation Current	IDDMAX	10	mA
Maximum Power Dissipation (Ta=25oC)	Ptot	0.45@ SOP-7	W
Thermal Resistance Junction-ambient	Rthj-a	145@ SOP-7	℃/W
Operating Junction Temperature	TJ	-40～150	℃
Storage Temperature Range	TSTG	-55～150	℃
ESD		2,000	V

Note 1: Absolute Maximum Ratings indicate limits beyond which damage to the device may occur. Exposure to Absolute Maximum Rating conditions for extended periods may affect device reliability。

Electronic Characteristics

T_C =25°C,V_{DD} =11V,unless otherwise specified

Parameter		Symbol	Test Conditions	Min	Typ	Max	Unit
VDD Turn On Threshold Voltage		VDD_ON	VDD Rising	10.5	11.5	13	V
VDD Turn Off Threshold Voltage		VDD_UVLO	VDD Falling	7.5	8.5	9.0	V
VDD Start Up Current		IST	VDD= VDD_ON-1V		300	700	uA
VDD Operating Current		IOP	F =7KHZ	80	150	300	uA
VDD Clamp Voltage		VDD_CLAMP	5mA		14		V
FB Falling Edge Threshold Voltage		VFB_FALL	FB Falling		0.2		V
FB Over Voltage Protection Threshold		VFB_OVP		1.9	2.0	2.1	V
Min. Degaussing time		TOFF_MIN			2		us
Max. Degaussing time		TOFF_MAX		195	270	350	us
Maximum On time		TON_MAX			25		us
ISEN Peak Voltage Limitation		VISEN_LMIT		1.4	1.5	1.6	V
OCP Leading Edge Blanking Time		TLEB			300		ns
Switch off Delay Time		TDELAY			100		ns
Internal Reference Voltage		VREF		194	200	206	mV
COMP Low Clamp Voltage		VCOMP_L			0.7		
COMP High Clamp Voltage		VCOMP_H			3		
SP2798A	Power MOSFET Rds(on)	RDS(ON)	VGS=15V/ IDS=0.5A		6.5	7.0	Ω
SP2798B					3.5	4.0	
SP2798C					2.2	2.4	
Breakdown Voltage		BVDSS	VGS =0/ IDS =250uA	600			V
Drain Leakage Current		IDSS	VGS =0/ VDS =600V			1	uA
Over-temperature Protection		TREG			150		℃

Sanpu Microelectronics